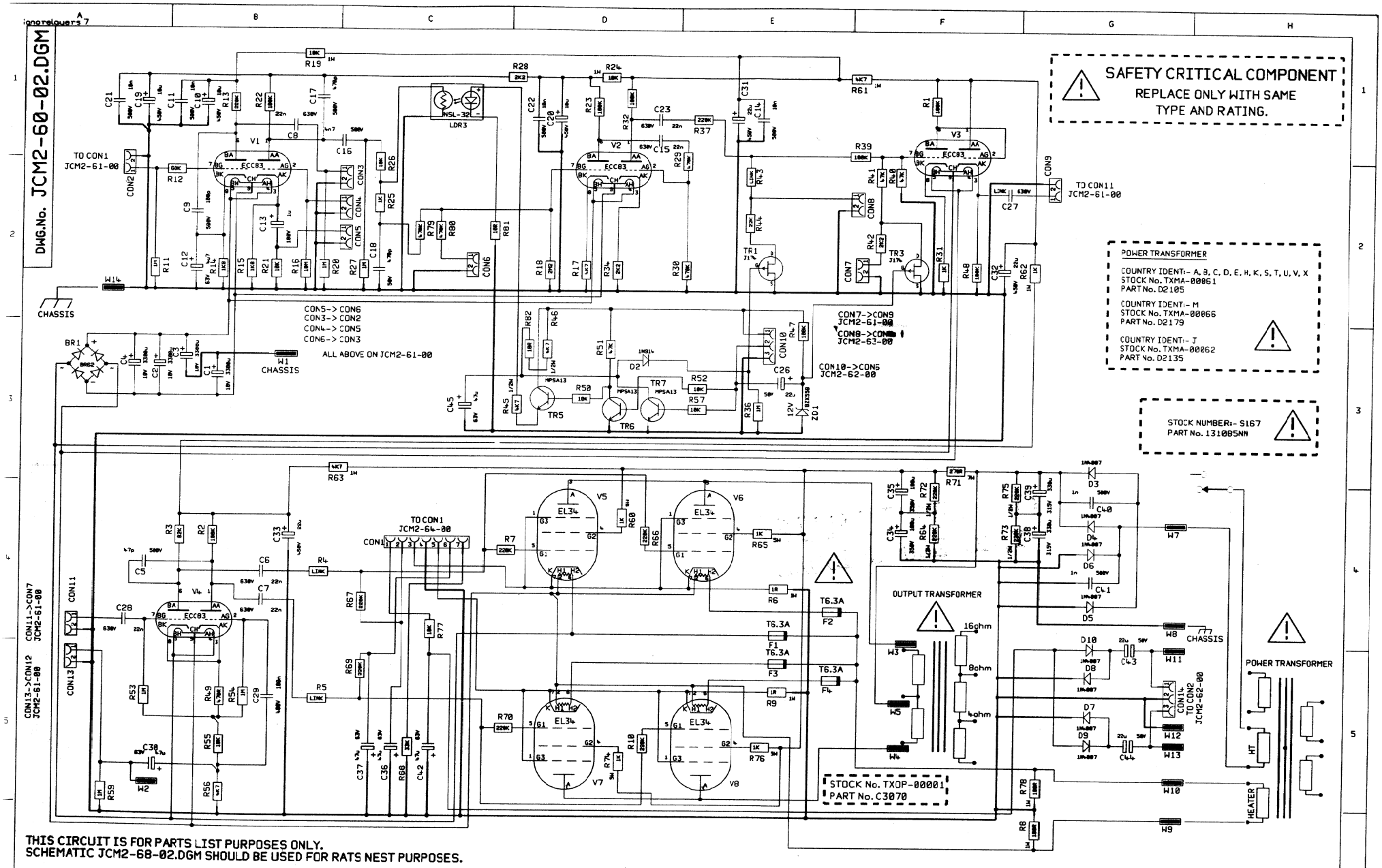

ISS	ECONUMBER	DATE
4	1553	15/12/97
3	1540	14/11/97
2	1466	1/8/97
1	PRODUCTION	28/6/97

ALL OTHER HOLES = X = (THROUGH PLATED)

A				E			J			N	
B				F			K			P	
C				G			L			Q	
D				H			M			R	

MATERIAL
MATERIAL THICKNESS
DRAWN S.G DATE 19/3/97
CHECKED DATE
APPROVED DATE
DIMENSIONS IN
TOLERANCE UNLESS OTHERWISE STATED
MODEL DSL100

Marshall
© MARSHALL AMPLIFICATION PLC
DENBIGH ROAD, BLETCHLEY, MILTON KEYNES, MK1 1DQ.
TEL (01908) 375411 FAX (01908) 376118

TITLE JCM2000 SUPERLEAD STANDARD
DWG.No JCM2-60-02.DGM ISS 4